33ID EPS Terminal Block Wiring

FULL FILENAME		
Y:\HOME\JEMIAN\VISIO\33ID\EPS\WIRING.VSD		
PAGE	REVISED	LOCATION
1 OF 6	8/15/2005	33ID-A (FOE)

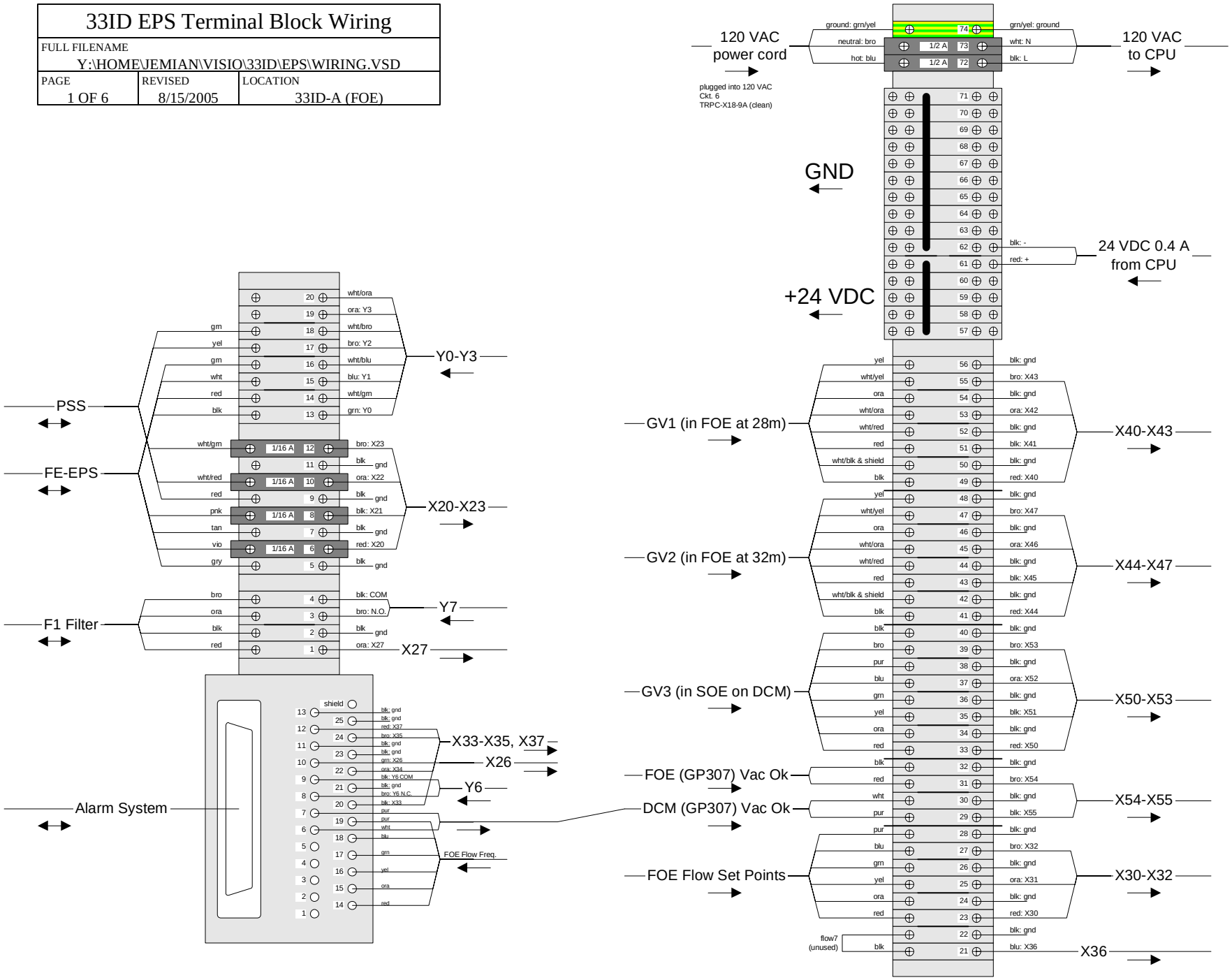

EPS: CPU (lower) Port 2, DirectNET		
FULL FILENAME Y:\HOME\JEMIAN\VISIO\33ID\EPS\WIRING.VSD		
PAGE 2 OF 6	REVISED 8/15/2005	LOCATION 33ID-A (FOE)

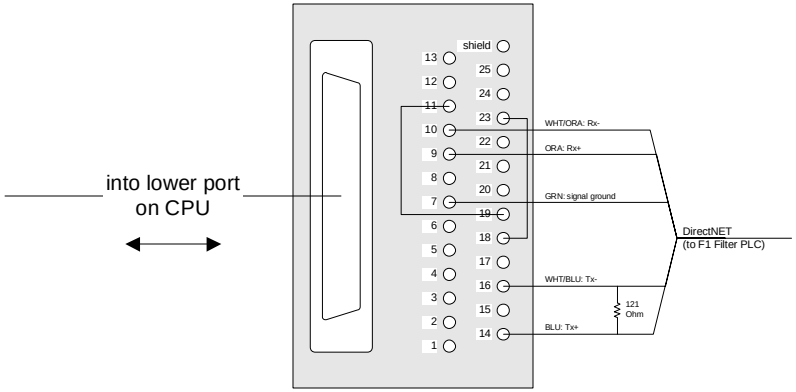

NOTE:
DirectNET cable (Belden M 9831 CM 4PR24 SHIELDED 4 TWISTED PAIR COMPUTER CABLE) is wired directly to DB25M connector. Terminal block interface board is shown here only to simplify the drawing.

Gate Valve Position Switch Wiring		
FULL FILENAME Y:\HOME\JEMIAN\VISIO\33ID\EPS\WIRING.VSD		
PAGE 3 OF 6	REVISED 8/15/2005	LOCATION 33ID-A & C (FOE & SOE)

Switch Body on VAT Gate Valve
(valve shipped with switches miswired AND wrong pinout!)

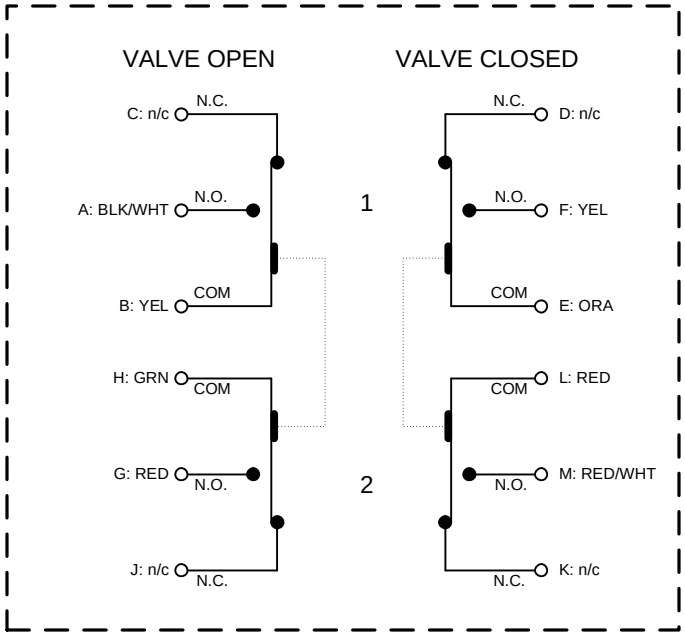

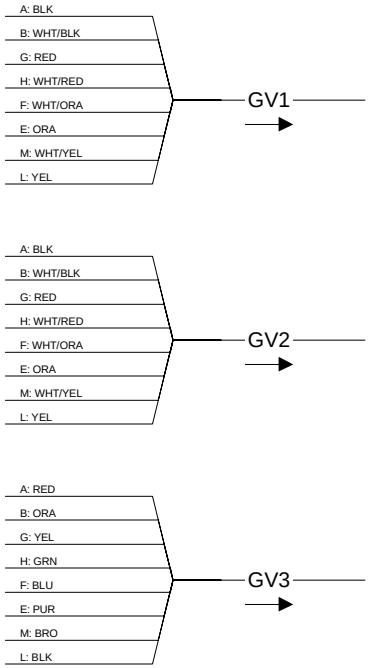

NOTE:
Valves GV1 and GV2 were wired with 15-conductor cable. GV3 was wired with 8-conductor cable.

FOE: Proteus Flow Meter Wiring

FULL FILENAME		
Y:\HOME\JEMIAN\VISIO\33ID\EPS\WIRING.VSD		
PAGE	REVISED	LOCATION
4 OF 6	8/15/2005	33ID-A (FOE)

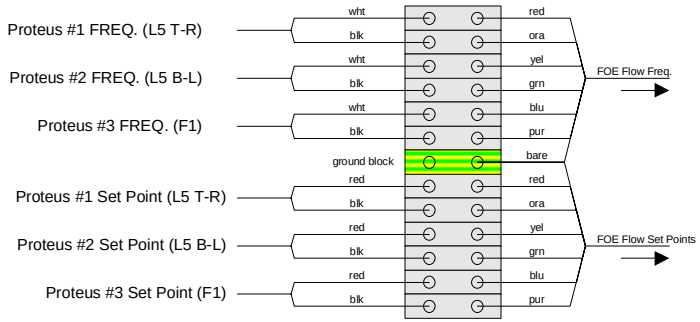

terminal block on DIN rail
attached to L5 slit frame
below Proteus electronics

SOE: Proteus Flow Meter Wiring

FULL FILENAME		
Y:\HOME\JEMIAN\VISIO\33ID\EPS\WIRING.VSD		
PAGE	REVISED	LOCATION
5 OF 6	8/15/2005	33ID-C (SOE)

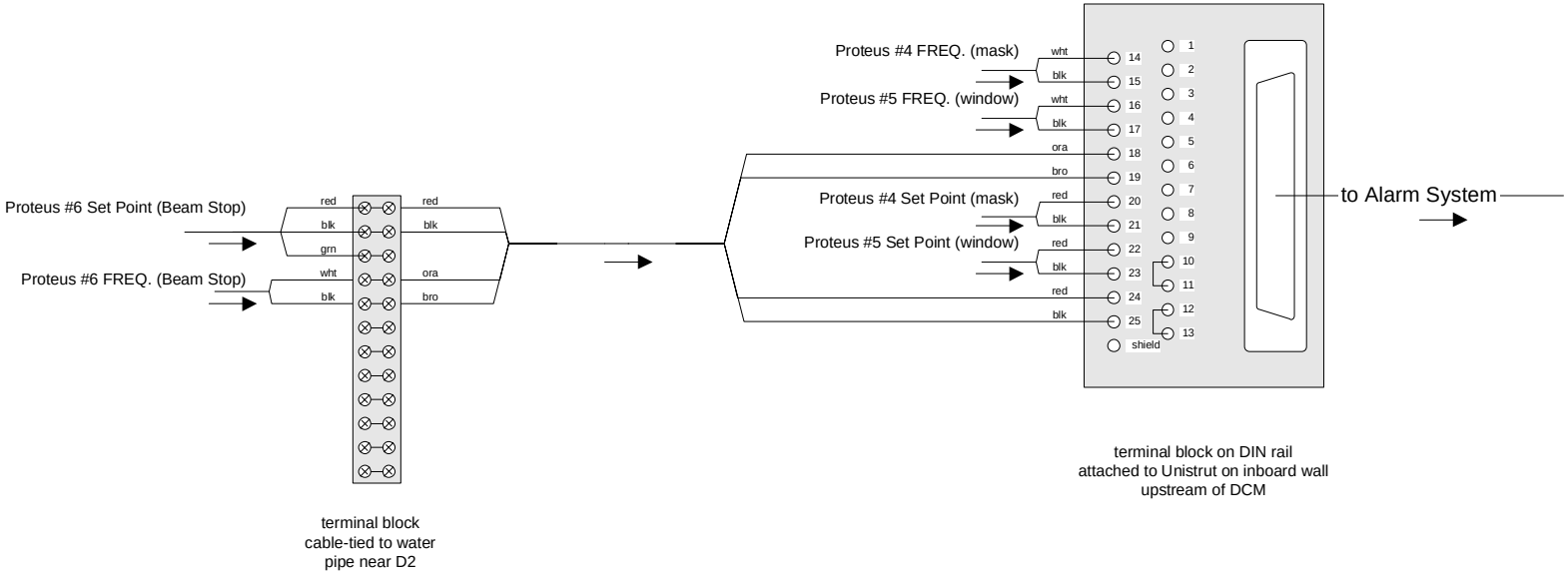

Alarm System: DB25 Connections for EPS		
FULL FILENAME Y:\HOME\JEMIAN\VISIO\33ID\EPS\WIRING.VSD		
PAGE 6 OF 6	REVISED 8/15/2005	LOCATION outside of 33ID-A

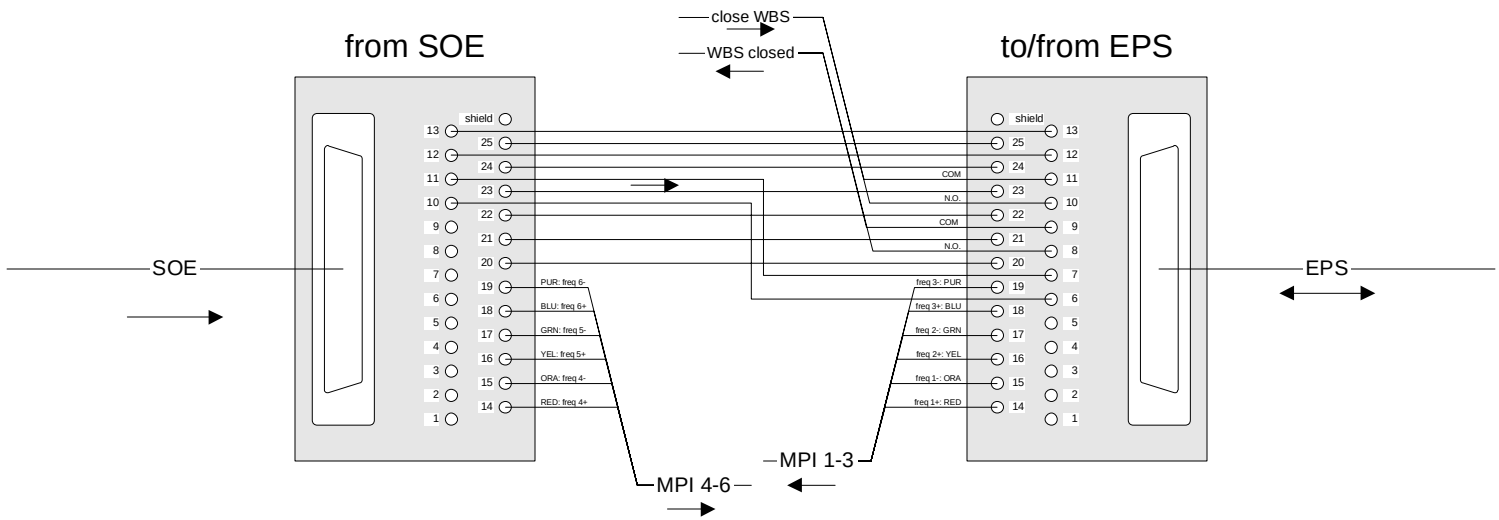

NOTE:
This terminal block is pictured here in mirror image from the actual device to simplify the display of the interconnected wiring.